NOTES:
1.HOUSING MATERIAL: HIGH-TEMP THERMOPLASTIC UL94V-0 , COLOR: NATURE
2.CONTACT MATERIAL: COPPER ALLOY
PLATING : MATTE-TIN OR GOLD FLASH PLATED.
3.SHIELD: STAINLESS STEEL PLATING : TIN PLATED OR GLOD FLASH
ORDER INFORMATION: 3707K -X 02 N- 09 X

- PACKING: R: PLASTIC REEL, L: PAPER REEL, E: TUBE
- TYPE: 09
- N: STANDARD
- PIN NO.: 02
- PLATING: X
  - Q: MATTE-TIN
  - F: CONTACT GOLD FLASH SHIELD TIN
  - S: CONTACT MATTE-TIN SHIELD GOLD FLASH
- 1.0 WTB SMT R/A TYPE SINGLE ROW (HALOGEN-FREE)

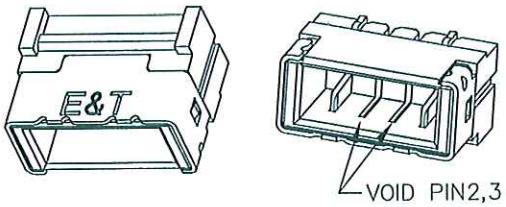

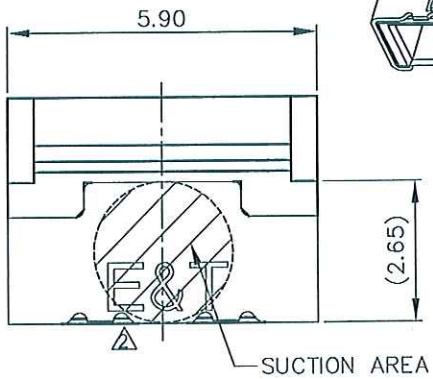

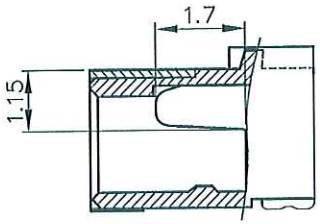

SECTION A-A

恩得利工業股份有限公司 發行章 101. 5. 10 R&D 產品開發中心

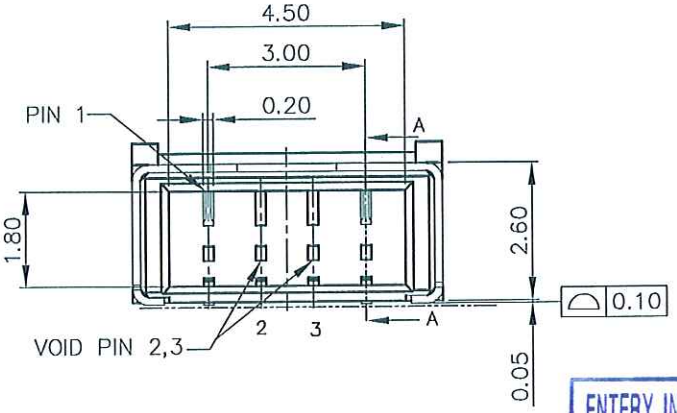

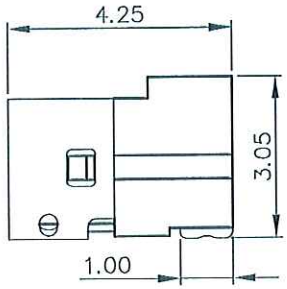

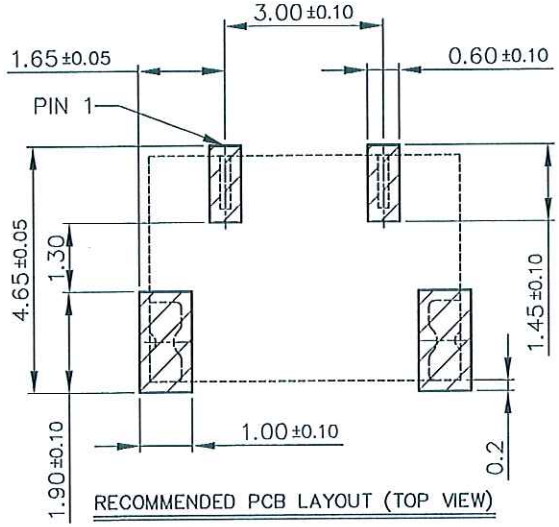

RECOMMENDED PCB LAYOUT (TOP VIEW)

ENTERY INDUSTRIAL CO., LTD.
MAY 10. 2012
R&D D.C.C. ISSUED

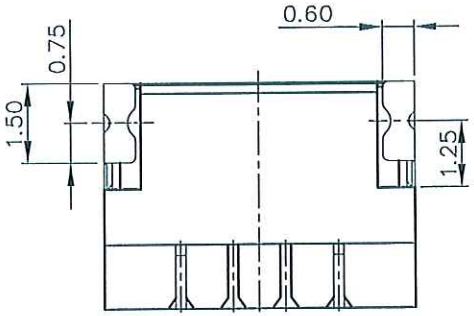

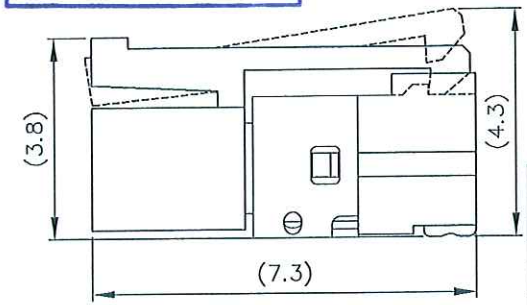

MATING VIEW

SER	REVISIONS	CHK	DATE
A	RE201204021	JIMMY	05/04/12
B	RE201202015	JIMMY	04/03/12

CUSTOMER

GENERAL TOLERANCE UNLESS OTHERWISE SPECIFIED
X.X ±0.25
X.XX ±0.15
X.XXX
ANG. ±0°30'

恩得利工業股份有限公司 ENTERY INDUSTRIAL CO., LTD.

DRAWN: JIMMY APR-03-2012
CHECKED:
APPROVED:
SHEET: 1/1

PART NO.: 3707K-X02N-09X
TITLE: 1.0 WTB

UNIT	SCALE	SIZE	REV
MM	7:1	A4	B