TO

SPECIFICATION FOR APPROVAL

DESCRIPTION: 0.5mm COAX.Rcpt.SMT R/A S/R Type

CUSTOMER PROD.NO/DWG.NO:

E&T PROD.NO: 0871K-XXXN-XXX

APPROVAL SHEET NO:

E&T DWG. NO./DOCUMENT: 0871K-XXXN-XXX

REV: A5

PLEASE RETURN TO US ONE COPY OF"SPECIFICATION FOR APPROVAL"WITH YOUR APPROVED SIGNATURES.

APPROVED SIGNATURES			

®

The Quality Connection

ENTERY INDUSTRIAL CO., LTD.
E&T ELECTRONICS (DONG GUAN) CO., LTD.
E&T ELECTRONICS (SU ZHOU) CO., LTD.

ENTERY INDUSTRIAL CO., LTD.

0.5mm COAX.Rcpt.SMT R/A S/R Type

RE201501001		Title: 0.5mm COAX.Rcpt.SMT R/A S/R Type
A5	2015/1/12	This Document Contains Information That Is Proprietary To E&T And Should Not Be Used Without Written Permission
Rev	Description	

Document No. 0871K-XXXN-XXX	Prepared By: Hunter	Date: 08.17'2009
	Checked By:	Date: 01.13.15'
	Approved By:	Date:

ENTERY INDUSTRIAL CO., LTD.

GROUP AND TEST SEQUENCE

Test of Examination		Test Group										
		A	B	C	D	E	F	G	H	I	J	K
1	Examination of Product	1,9	1,6	1,5	1,5	1,5	1,3	1,3	1,3	1,5	1,5	
2	Contact Resistance	2,6	2,5	2,4	2,4	2,4				2,4	2,4	
3	Insulation Resistance	3,7										
4	Dielectric Strength	4,8										
5	Insertion Force And Withdrawal Force		3									
6	Terminal / Housing Retention Force											1
7	Durability		4									
8	Vibration			3								
9	Heat Resistance				3							
10	Cold Resistance					3						
11	Humidity	5										
12	Solder Ability						2					
13	Resistance To Soldering Heat							2				
14	Steam Aging								2			
15	Salt Spray									3		
16	Temperature Cycling										3	

ENTERY INDUSTRIAL CO., LTD.

PRODUCT SPECIFICATION

1. SCOPE :

CABLE II CONN. IS A WIRE TO BOARD CONNECTOR FOR SMALL GAUGE COAXIAL CABLE (AWG#36~40)

2. PRODUCT NAME AND PART NUMBER :

Product Name	E&T Part Number
0.5mm COAX.Rcpt.SMT R/A S/R Type (Lead Free)	0871K-XXXN-XXX

3. RATINGS :

Item	Standard	
Rated Voltage (MAX.)	100 V (PER A CONTACT)	AC/DC
Rated Current (MAX.)	0.3A (AWG#40) (PER A CONTACT)	
	0.6A (AWG#38) (PER A CONTACT)	
	0.8A (AWG#36) (PER A CONTACT)	
Ambient Temperature Range	-20^0C ~ $+85^0$C	

4. PERFORMANCE :

4 - 1 Electrical Performance

Item		Test Condition	Requirement
4-1-1	Contact Resistance	Test Current: 10 mA Max. Test Voltage: 20mV Max Test Method:MIL-STD-202,Method 307.	Initial:540mΩMAX. ΔR :40mΩMAX. Initial value included AWG#40 cable resistance 485~520mΩ. See 5-2
4-1-2	Insulation Resistance	Test Voltage: 500V AC. Test Duration: 1 minutes. Test MIL-STD-202,Method 301.	Initial:1000MΩ MIN. After testing:100MΩ MIN.
4-1-3	Dielectric Withstanding Voltage	Test Voltage: 250 V AC. Test Time: 60 sec. Test Method: MIL-STD-202,Method 301.	No Breakdown

4-2 Mechanical Performance

Item		Test Condition	Requirement	
4-2-1	Insertion Withdraw Force	Test Speed: 25±3 mm/min. Test Method: EIA-364-13B	See 5-1	
4-2-2	Durability	The contacts of connector shall be subject to 100 cycles of mating and unmating. Test Method: EIA-364-09C	Appearance	No Damage
			Contact Resistance	Shall meet 4-1-1.
4-2-3	Contact Rentention Force (Receptacle)	Test Speed: 25mm/min.	1.67N(0.17kgf)Min.	

4-3 Environmental Performance and Others

Item		Test Condition	Requirement	
4-3-1	Vibration	Amplitude : 1.5 ㎜ Frequency range: 10~55~10 Hz in 1 minute Duration: 2 hours in each X.Y.Z axes Current: 100mA. DC Test Method: MIL-STD-202,Method 201.	Appearance	No Damage
			Contact Resistance	Shall meet 4-1-1.
4-3-2	Shock	Test Speed: 490m/s^2. Duration: 11msec. Physics: Half sinusoidal Test Method: MIL-STD-202,Method 213 Condition A.	Appearance	No Damage
			Contact Resistance	Shall meet 4-1-1.
4-3-3	Thermal Shock	Temperature: -65℃*30min~+125℃*30min Duration: 5min. MAX. No. of cycles: 5 cycles Test Method: MIL-STD-202,Method 107, Condition B.	Appearance	No Damage
			Contact Resistance	Shall meet 4-1-1.

ENTERY INDUSTRIAL CO., LTD.

Item		Test Condition	Requirement	
4-3-4	High Temperature Life	Temperature: 85±2℃ Duration: 250 hours Test Method: MIL-STD-202, Method 108, Condition B.	Appearance	No Damage
			Contact Resistance	Shall meet 4-1-1.
4-3-5	GAS(SO 2)	Temperature: 40±2℃ Gas: SO 2 10ppm. Relative Humidity: 80±5% Duration: 96 hours Test Method: MIL-STD-202, Method 106.	Appearance	No Damage
			Contact Resistance	Shall meet 4-1-1.
4-3-6	Humidity (Steady State)	Temperature: 40±2℃ Relative Humidity: 90~95%RH Duration: 240 hours Test Method: MIL-STD-202, Method 106.	Appearance	No Damage
			Contact Resistance	Shall meet 4-1-1.
			Insulation Resistance	Shall meet 4-1-2.
			Dielectric Withstanding Voltage	Shall meet 4-1-3.
4-3-7	Solder ability	Soldering Time : 5±0.5 sec Solder Temperature : 245±5℃ Test Method: MIL-STD-202, Method 208.	Solder Wetting	95% Of Immersed Area Must Show No Voids, Pin Holes
4-3-8	Resistance TO Soldering Heat	Soldering Time : 10±0.5 sec Solder Temperature : 260±5℃ Soldering iron method Solder Temperature : 350±5℃ Soldering Time : 3±0.5 sec Test Method: EIA-364-56C	Appearance	No Damage

5-1

NO of CKT	Insertion Force (Kgf, Max)		Withdrawal Force (Kgf, MIN)	
	1st	100st	1st	100st
20	3	2	0.35	0.25
30	4.5	3	0.5	0.35
40	6	4	0.7	0.6

INFRARED REFLOW CONDITION

1) Ascending time to preheating temperature 170°C shall be 40 seconds minimum.
2) Preheating shall be fixed at 160...180°C for 60...90 seconds.
3) Heating shall be fixed at 220°C for 50...60 seconds.
4) At 260±5°C peak shall be 10 seconds maximum.

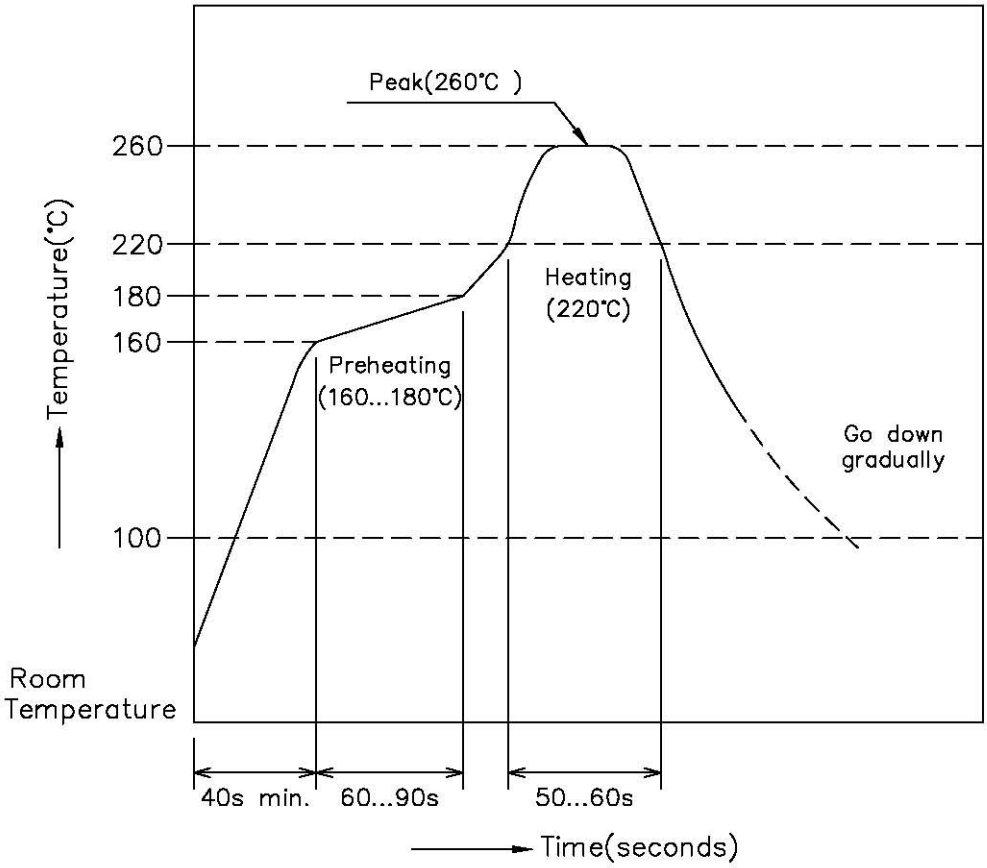

5-2

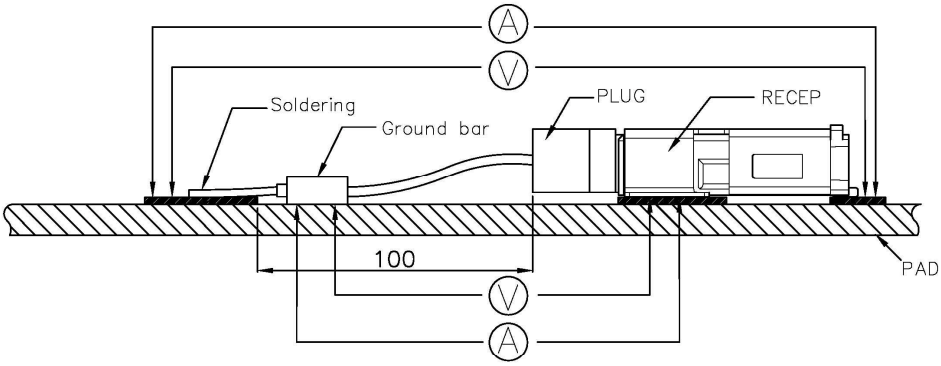

Contact Resistance

ENTERY INDUSTRIAL CO., LTD.

RELEASE HISTORY

Rev.	Revisions	Date	Executor	Description
A3	RE201303044	MAR-29-2013	Juno	CHANG P/N
A4	RE201305023	MAR-05-2014	Juno	CHANG UL
A5	RE201501001	JAN-12-2015	Juno	CHANG UL